STUART TURNER
ENGINEERED TO EXCEL

AQUABOOST

Installation, Operation & Maintenance Instructions

Please leave this instruction booklet with the home owner as it contains important guarantee, maintenance and safety information

Read this manual carefully before commencing installation.
This manual covers the following products:

iBoost F200 CAT 5
Pt. No. 46677

iBoost V200 CAT 5
Pt. No. 46713

Please note images are representative only and may not portray your model

CE

3 YEAR GUARANTEE

PRODUCT DESCRIPTION

iBoost F200 CAT 5

Water pressure and flow booster set with integral water storage tank and electric motor driven centrifugal pump complete with an automatic control system, consisting of flow switch, pressure switch, pressure vessel and electronic control. The tank design incorporates a weir type overflow to BS EN 1717, type AB giving isolation to fluid category 5.

iBoost V200 CAT 5

Water pressure and flow booster set with integral water storage tank and electric motor driven centrifugal pump complete with an automatic variable speed control system, consisting of pressure transducer and integral variable speed drive. The tank design incorporates a weir type overflow to BS EN 1717, type AB giving isolation to fluid category 5.

APPLICATION

The Aquaboost iBoost 200 CAT 5 is designed to meet the demand of pressurised water systems where the existing mains water supply is insufficient. **Inlet pressures to the tank and ambient temperatures must not exceed the values given in the technical specifications.**

STORAGE

If this product is not to be installed immediately on receipt, ensure that it is stored in a dry, frost and vibration free location in its original packaging.

CONTENTS

Page

Checklist 5

Important Facts – read before commencing installation 6

Location 7

Key Features 8

Installation & Pump Connections 9

Electrical Installation 13

Commissioning 16

Maintenance 20

Technical Specification 22

Trouble Shooting 24

Guarantee 26

WARNINGS:

- **This pump set must not be used for any other application without the written consent of Stuart Turner Limited.**
- **This appliance can be used by children aged from 8 years and above and persons with reduced physical, sensory or mental capabilities or lack of experience and knowledge if they have been given supervision or instruction concerning use of the appliance in a safe way and understand the hazards involved.**
- **Children shall not play with the appliance.**
- **This product should not be used for the supply of water to more than one dwelling (house, apartment, flat).**
- **Cleaning and user maintenance shall not be made by children without supervision.**
- **Maximum head (closed valve) 45 metres.**
- **The motor casing can become very hot under normal operating conditions. Care must be taken to ensure it cannot be touched during operation.**
- **The electrical installation must be carried out in accordance with the current national electrical regulations.**
- **The electrical installation must be installed by a qualified person.**
- **F200: In the interests of electrical safety a 30 mA residual current device (R.C.D. not supplied) should be installed in the supply circuit. This may be part of a consumer unit or a separate unit.**
- **V200: RCD's/ELCB's are not recommended for use with variable speed drives/motors. If an RCD is mandatory use type B RCD's.**
    - **For single phase sets with invertor motors the earth leakage circuit breaker must trip out when an earth fault currents with DC content (pulsating DC) occur.**

    - **RCD's suitable for use with variable speed drives/motors are not suitable for personnel protection.**
    - **Do not touch any electrical components for at least 5 minutes after the unit has stopped to allow any discharge to occur safely.**
- **Before starting work on the electrical supply ensure power supply is isolated.**
- **DO NOT allow the supply cord to contact hot surfaces, including the motor shell, pump body or pipework. The cord should be safely routed and secured by cable clips.**
- **This appliance must be earthed via the supply cord, which must be correctly connected to the earth point located in the terminal box.**
- **The supply cord and internal wiring within the terminal box are routed and secured to ensure compliance with the electrical standard EN 60335–1. It is essential that prior to any disturbance of this internal wiring, all cable routing and securing details are carefully noted to ensure re-assembly to the same factory pattern is always maintained.**
- **If the supply cord is to be changed or is damaged, it must be replaced with a special cord assembly available from Stuart Turner or one of their approved repairers.**
- **In order to avoid toppling over the appliance must be placed on a smooth, level surface and the retaining strap must be fitted.**

Please read installation details carefully as they are intended to ensure this product provides long, trouble free service. Failure to install the unit in accordance with the installation instructions will lead to invalidation of the warranty.

Cont ...

CHECKLIST

IMPORTANT: With the appliance removed from its packaging check for any damage prior to installation. If any damage is found contact Stuart Turner Ltd within 24 hours of receipt.

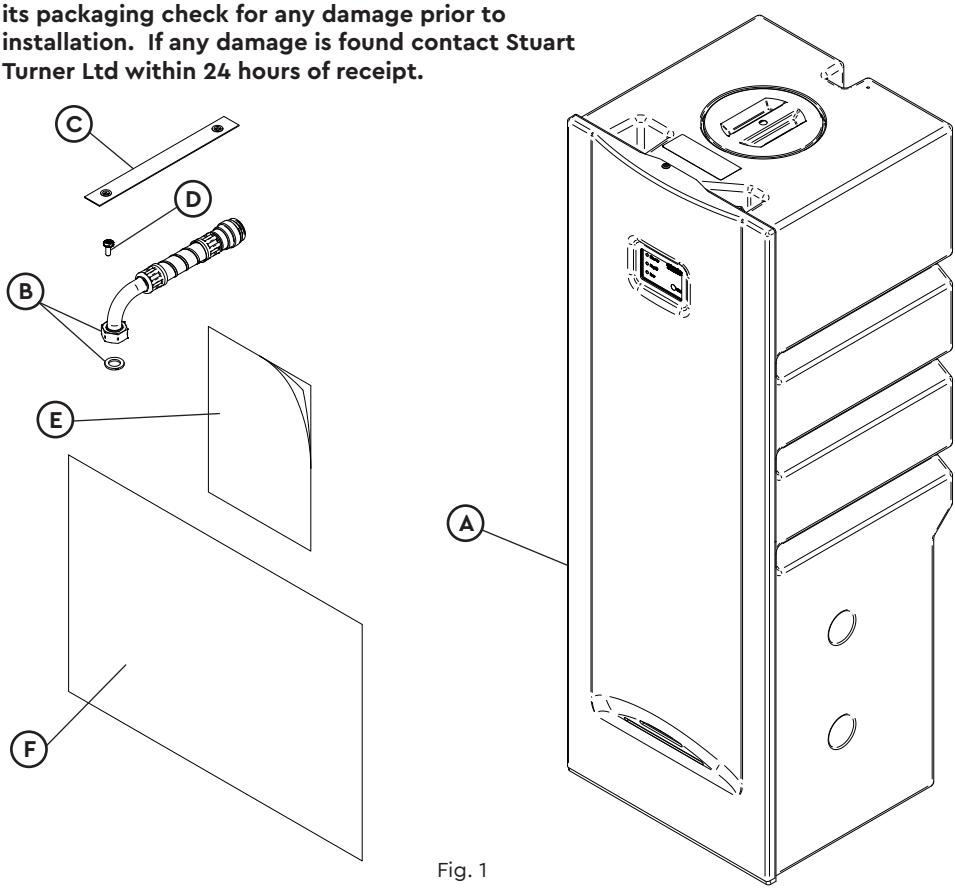

Fig. 1

Item	Description	Qty	Item	Description	Qty
A	iBoost 200 CAT 5	1	D	M6 screw	1
B	Hose & sealing washer	1	E	Instruction book	1
C	Retaining strap	1	F	Installation template	1

Note: Item B supplied loose – this will require fitting to the pump outlet. Tighten to torque 4/5 Nm.

Your product may vary slightly from the picture above.

Cont ...

1 IMPORTANT FACTS: READ BEFORE COMMENCING PUMP INSTALLATION

A **Water storage capacity**.

1.11 The iBoost has a usable water volume of approximately 200 litres; the length of time the iBoost delivers water will be dependent on the usage and refill rates.

1.12 Ensure the pump is primed as described in the priming section before starting, to avoid causing damage to the pump shaft seal. See Section 6 – Commissioning.

B **Water temperature**

This unit is designed to pump cold water only which should not exceed the following values:

1.13 The maximum allowable water temperature is 23 °C (see Section 7.13).

1.14 The minimum allowable water temperature is 4 °C.

C **Pipework – General**

1.15 **Do not** drill holes or put fastenings into the iBoost tank, this will cause leakage.

1.16 **Secure pipework:** Ensure pipework to and from pump is independently supported & clipped to prevent forces being transferred to inlet and outlet branches of pump. **Do not** secure pipework to the iBoost, this will cause damage and possible leakage.

1.17 **Flux:** Solder joints must be completed and flux residues removed prior to iBoost installation **(flux damage will void any warranty)**.

1.18 **Pipework design:** Care should be taken in the design of pipework runs to minimize the risk of air locks e.g. use drawn bends rather than 90° bends.

1.19 **DO NOT** introduce solder flux to flexible hose, tank, pump or any parts manufactured from plastic.

1.20 **DO NOT** allow contact with oil or cellulose based paints, paint thinners or strippers, acid based descalents or aggressive cleaning agents.

1.21 **DO NOT** bend the flexible hose beyond 30°. It must be installed as straight as possible.

D **Plumbing Installation Regulations**

1.22 The plumbing installation must comply with the current water and building regulations.

1.23 The plumbing installation must be installed by a qualified person.

E Pressure vessel

1.24 Pressure vessel is charged at the factory see Section 7 – Maintenance for details.

Cont ...

2 LOCATION – GENERAL

2.11 **Access:** For emergencies and maintenance the pump must be easily accessible.

2.12 **Protection:** The iBoost must be located in a dry, frost free area. The iBoost must not be installed in a loft space.

2.13 **Ventilation:** Ensure an adequate air flow to cool the iBoost. Separate the iBoost from other appliances that generate heat. **Do not** block the vent holes on the front panel.

2.14 **Safety:** Motor is not accessable in normal operating mode. Unit must only be operated with the front cover in place.

2.15 **Water retention:** Site the iBoost in a location where in the unlikely event of overflow, water leak, any spillage is contained or routed to avoid electrics or areas sensitive to water damage.
The iBoost has a weir type overflow at the rear of the tank, in the event of overflow, the water will drain from the weir area.
A minimum gap of 50 mm must be allowed at the rear of the tank to allow any possible overflow water to exit the weir area. **The weir area must not be blocked or covered.**

2.16 **Supply inlet pressure:** The water supply inlet pressure must be lower than 7 bar; lower supply inlet pressures will reduce the tank fill rate and reduce the time the iBoost will run at higher flow rates before running out of stored water.

2.17 **Ambient temperature:** The iBoost must be sited in a location where the ambient temperature does not exceed 30 °C (see Section 7.13 – Water Quality).

2.18 **Pipework:** For optimum performance outlet pipework must be 22 mm pipe. Pipework should only reduce to 15 mm when entering terminal fittings.

2.19 **Static outlet pressure:** The static outlet head must also be within the maximum requirement of 15 metres (vertically above the appliance).

2.20 **Noise:** A flexible hose is supplied as standard which will minimise the transmission of noise and vibration from the iBoost pump to the pipework connected to the appliance outlet. However, care must be taken when mounting the iBoost that any noise is not amplified through loose panels or pipework.

2.21 **Direction of flow:** Ensure the water flow is in the direction of the arrow marked on the flow switch reed clamp (vertically upwards).

2.22 **Flexible hose:** Only use the Stuart Turner hose supplied with the pump.

2.23 **Isolating valves:** Separate system isolating valves (non restrictive) must be fitted to allow easy pump service. Isolating valves must be mounted where specified to allow the system isolation and removal of the iBoost if needed. See Section 4 for installation details.

2.24 **Preferred iBoost location:** The preferred iBoost location is on a smooth level floor of sufficient strength to support the filled weight of the iBoost close to the water source and a suitable overflow position (see Section 8 – Technical Specification for filled weight).
The iBoost must not be installed in a loft space.
It must also be considered that the noise and vibration from the iBoost may be transmitted through the structure the iBoost is sited on.
Ensure there is sufficient room above the iBoost to allow the removal and servicing of the internal float valve if needed, typically 350 mm.

3 KEY FEATURES

iBoost F200 CAT 5

Note: iBoost shown with front cover removed

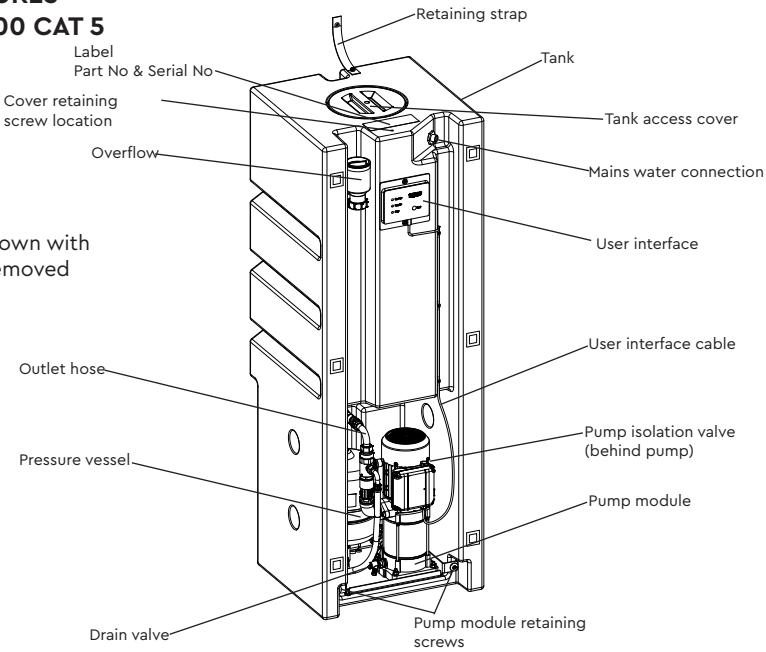

Fig. 2

iBoost V200 CAT 5

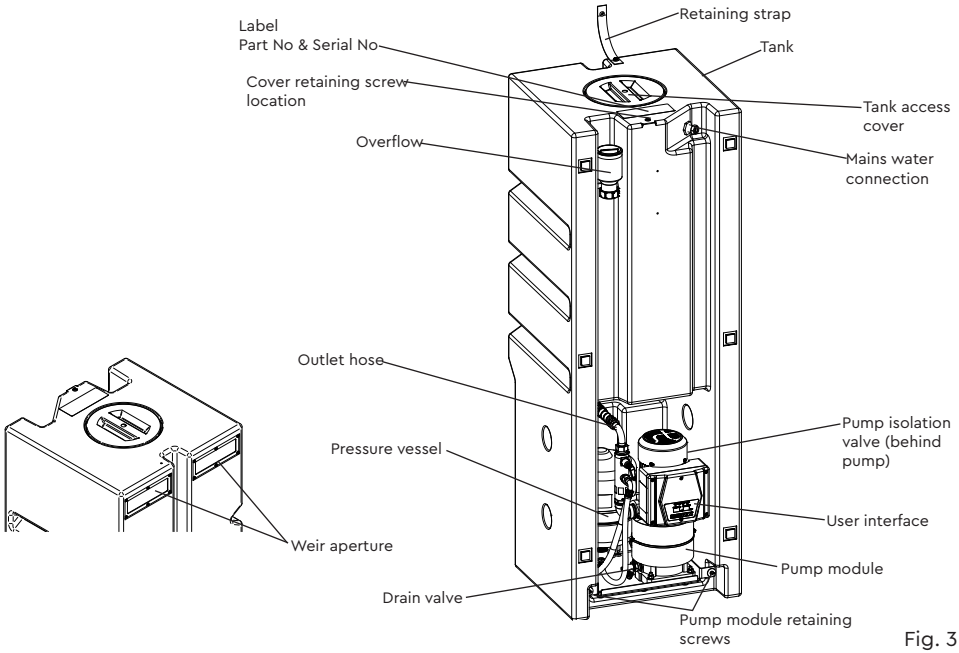

Fig. 3

4 INSTALLATION & PUMP CONNECTIONS

4.11 **Mains water connection to iBoost 200 CAT 5:** The iBoost is to be permanently connected to the mains water supply using rigid pipe or suitably sized and rated flexible hose to comply with current building and plumbing regulations.
The water tank fill valve has a G ½ male threaded fitting; a suitable 90° elbow type fitting must be used. When tightening ensure the fill valve within the tank is not rotated. If the valve is rotated it may not function correctly with the risk of flooding.
Ensure there is a demountable joint in the pipe to allow the removal of the iBoost if needed (see Fig. 8).

4.12 **Water outlet pipework:**

1. The pump has a G ¾ threaded connection to accept the supplied hose. The hose is made water tight with a sealing washer on assembly, nip tight to 4 to 5 Nm for water tight seal. **(Do not overtighten)**. The supplied hose must only be connected to 22 mm pipework.
   Ensure the pipe is free from all score marks and deformities in the area of the insertion depth (Fig. 4) and cut the pipe square removing all burrs and sharp edges to prevent damage to the sealing 'O'-ring.
2. Prior to inserting the pipe into the fitting mark the insertion depth on the wall of the pipe with a soft pencil at a distance of 33 mm from the end to be inserted.

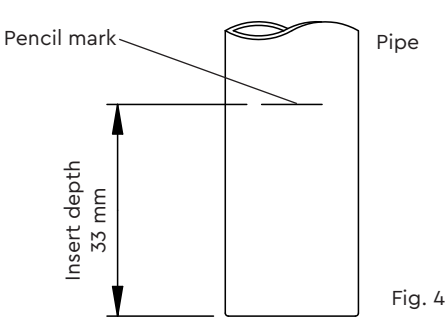

Fig. 4

3. Check in the mouth of the fitting that the 'O'-ring, nylon washer and collet are in position.

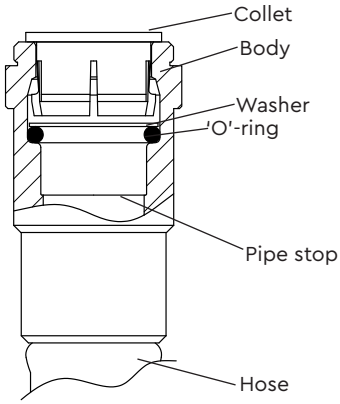

Fig. 5

Cont ...

4. Push pipe firmly into fitting, until pencil mark is level with the top of the collet and the pipe stop resistance is felt. Pull on the pipe to check it is secure and correctly fitted.
5. To break the joint, push pipe firmly into fitting, hold collet down and gently remove pipe. If the system has been fitted with water care should be taken to isolate pump and towels used to absorb spilled water.

4.13 **Connection to warning pipe:** The overflow fitting is designed to use G ¾ (21.5 mm OD) plastic waste pipe. Ensure there is a demountable joint in the pipe to allow the removal of the iBoost if needed (see Fig. 8). The warning pipe must be free to vent to atmosphere either via a tundish or a dedicated external pipe.

4.14 The iBoost is intended to be either installed as a freestanding unit with its back to a wall (minimum gap 50 mm) or into a 600 mm wide, 2 m high cupboard. If installed into a 600 mm cupboard the floor and back panel will need to be removed and the cupboard spaced forward to allow the 50 mm clearance at the rear to allow for the weir overflow discharge. The carcass of the cupboard will need to be screwed to the adjacent units and the wall for support (also see section 2.15).
All the services are connected to the iBoost via a plumbing access window at the back of the unit, the installation is conducted in 4 simple steps.
Prior to installation remove the screw on the top of the unit and pull the corner of the front cover to remove it and retain them in a safe place.

Step 1
Position the paper installation template on the wall where the iBoost is to be installed, ensuring the 'floor level' of the template is level and resting on the surface the iBoost is to be mounted on (Fig. 6).

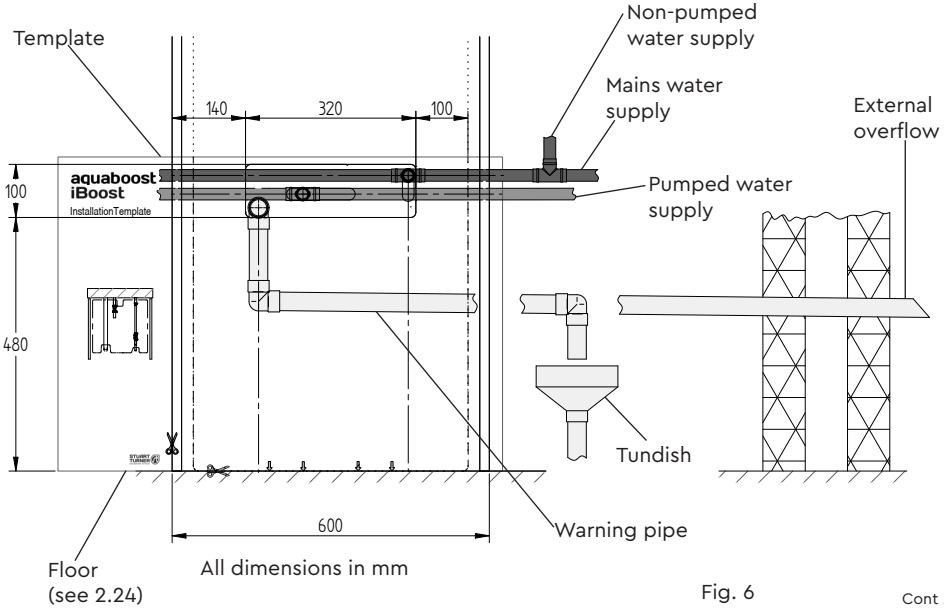

Fig. 6

Cont ...

Step 2

Run the mains water, pumped water supply and overflow to the template positions and make the pipe length as detailed in Fig 7.

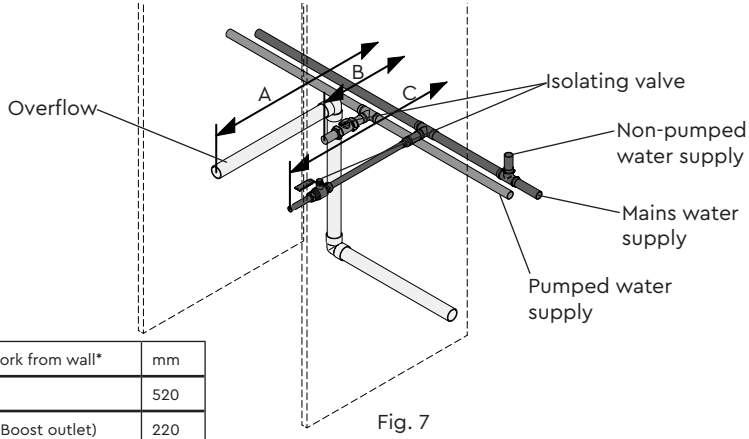

Fig. 7

	Length of pipework from wall*	mm
A	Overflow	520
B	Pumped water (iBoost outlet)	220
C	Mains water supply	530

*Lengths are dependent on fittings used

Step 3

Slide the iBoost into position in front of the services leaving approximately 50 mm gap between the iBoost and the wall behind.

Connect the services using isolation valves and demountable fittings (push-fit or compression) where shown in Fig. 8. The positioning of these fittings allow the iBoost to be removed without cutting pipes or draining the system.

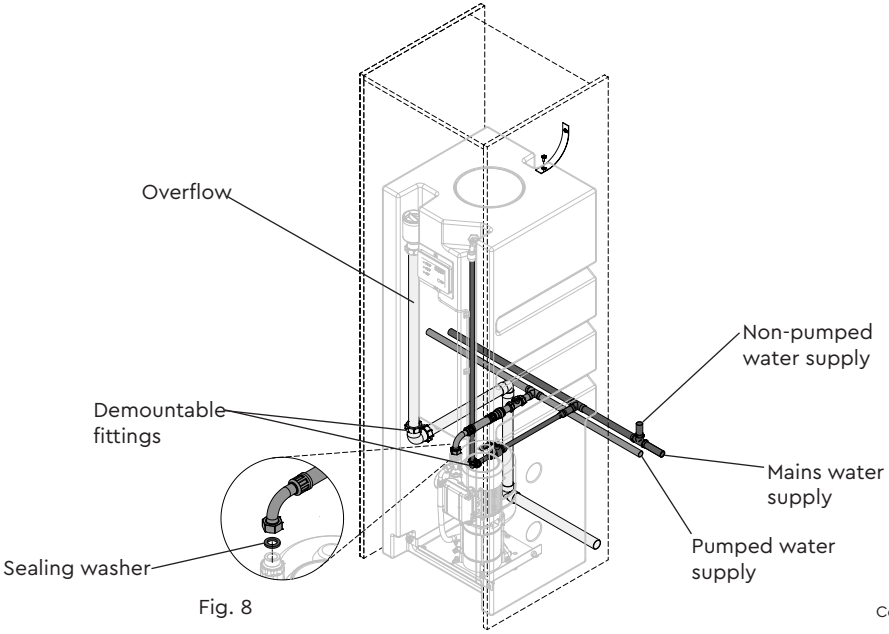

Fig. 8

Cont ...

Step 4
Fix the retaining strap to the top of the iBoost using the M6 screw provided. The free end of the strap must be secured to suitable wall using a suitable fastening system.

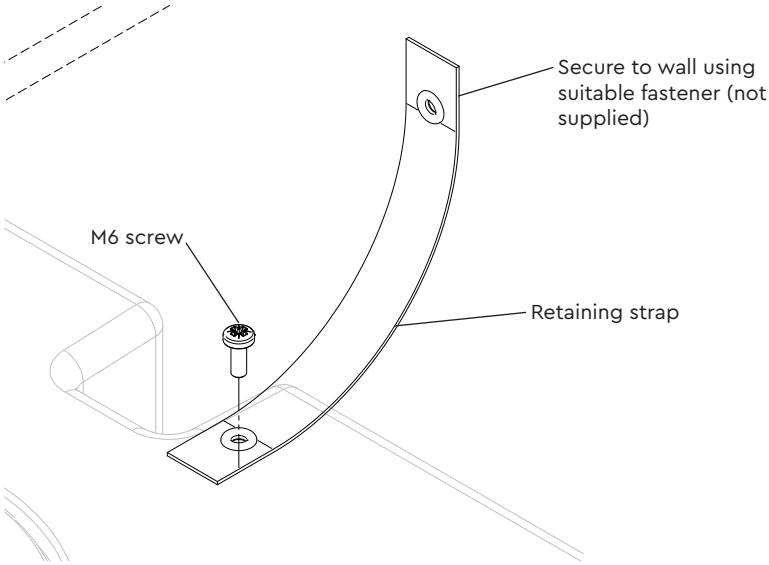

Fig. 9

4.15 It is recommended that at least one drinking water tap is connected into the un-pumped mains water supply (typically a kitchen sink), so the water supply is maintained in the event of a failure of the pumped supply.

Cont ...

5 ELECTRICAL INSTALLATION / EARTHING

5.11 **Regulations:** The electrical installation must be carried out in accordance with the current national electrical regulations and installed by a qualified person.

5.12 **Safety – F200:** In the interests of electrical safety a 30 mA residual current device (**R.C.D. not supplied**) should be installed in the supply circuit. This may be part of a consumer unit or a separate unit.

Safety – V200: RCD's/ELCB's are not recommended for use with variable speed drives/motors. If an RCD is mandatory use type B RCD's.

- For single phase sets with invertor motors the earth leakage circuit breaker must trip out when an earth fault currents with DC content (pulsating DC) occur.
- RCD's suitable for use with variable speed drives/motors are not suitable for personnel protection.
- Do not touch any electrical components for at least 5 minutes after the unit has stopped to allow any discharge to occur safely.

5.13 Before starting work on the electrical supply ensure power supply is isolated.

5.14 **DO NOT** allow the supply cord to contact hot surfaces, including the motor shell, pump body or pipework. The cord should be safely routed and secured by cable clips.

5.15 **Adjacent pipes:** Adjacent suction and delivery pipes should be fitted with earthing clamps in accordance with current regulations (Fig. 10).

Diagram of earth continuity connections

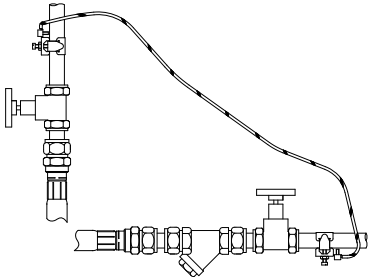

Fig. 10

5.16 **Earthing:** This appliance must be earthed via the supply cord, which must be correctly connected to the earth point located in the terminal box.

5.17 **Pipework:** Copper or metallic pipework must have supplementary earth bonding where the continuity has been broken by flexible hoses or plastic components.

5.18 **Additional earthing:** Certain installations may require additional earthing arrangements such as equipotential bonding. Reference should be made to the relevant regulations concerning this subject to ensure compliance.

5.19 **Connections:** The pump must be permanently connected to the fixed wiring of the mains supply using the factory fitted supply cord, via a double pole switched (with a minimum of 3 mm contact separation) fused spur off the ring main and **NOT** connected to the boiler or the immersion heater circuits.

5.20 The electrical connection **must be** made adjacent to (not behind) the iBoost to allow disconnection of the electrical supply should the pump module need to be removed for service or maintenance.

5.21 **Wiring of connection unit:**

WARNING: This appliance must be earthed.

The wires in the mains lead (supply cord) are coloured in accordance with the following code:

Green and Yellow: Earth
Blue: Neutral
Brown: Live

As the colours of the wires in the mains lead of this appliance may not correspond with the coloured markings identifying the terminals in your connection unit proceed as follows:

- The wire which is coloured green and yellow must be connected to the terminal in the connection unit which is marked with the letter E or by the earth symbol: ⏚ or coloured green or green and yellow.
- The wire which is coloured blue must be connected to the terminal which is marked with the letter N or coloured black.
- The wire which is coloured brown must be connected to the terminal which is marked with the letter L or coloured red.

5.22 **Wiring Diagrams:**

iBoost F200 CAT 5

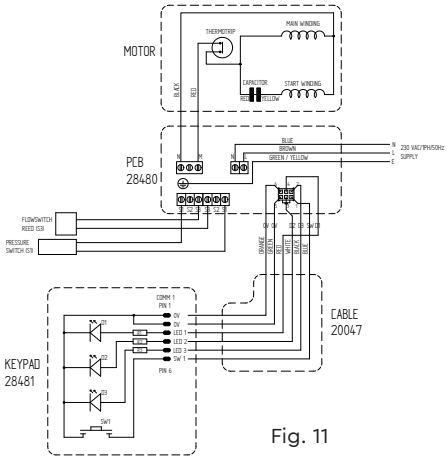

Fig. 11

iBoost V200 CAT 5

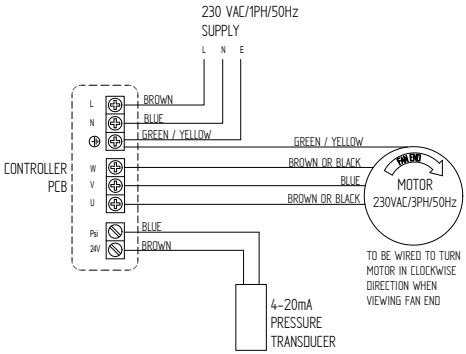

Fig. 12

5.23 **Fuses:** The following fuse size should be used:

Model	Fuse Size (AMPS)
iBoost all models	10

Cont ...

5.24 **Supply Cord Replacement:**

The supply cord and internal wiring within the terminal box are routed and secured to ensure compliance with the electrical standard EN 60335–1. It is essential that prior to any disturbance of this internal wiring, all cable routing and securing details are carefully noted to ensure re-assembly to the same factory pattern is always maintained.

If the supply cord is to be changed or is damaged, it must be replaced with a special cord assembly available from Stuart Turner or one of their approved repairers.
On disassembly note the cord retention and routing system. Re-assemble to the same pattern.
For information on cable connection consult the wiring diagram and cable gland fitting instructions.

5.25 **Cable Gland Fitting Instructions:**

iBoost F200 CAT 5

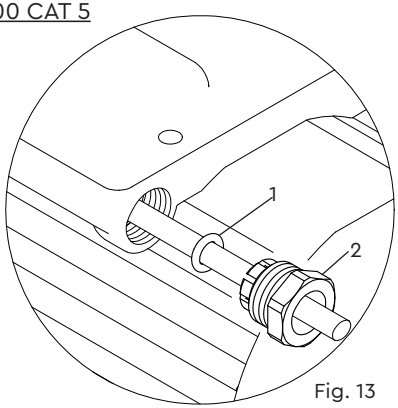

Fig. 13

To enable correct assembly of the cable gland the 'O'-ring (Fig. 13 item 1) must be placed over the cable before the clamping insert (Fig. 13 item 2) can be tightened.
Note: Cable diameter range:- 9.2 mm to 11.9 mm.

iBoost V200 CAT 5

For information on cable gland fitting contact Stuart Turner Ltd.

5.26 **Supply Cord Extension:**

The pumps are fitted with a supply cord to the following specification:-
All models. . . . . .HO7RN-F3 G 1.5 mm² – 10 Amp rated cable.
If the supply cord is to be extended, a cord of the same specification should be used. Any connections or junction boxes used should be specifically suited for the application and installed in accordance with the manufacturers instructions.

Cont ...

6 COMMISSIONING / STARTING

iBoost F200 CAT 5

6.11 The iBoost is fitted with a user interface, this has the following indicator lights

A) Green – illuminated when the mains power is supplied to the iBoost

B) Orange– illuminated when the pump is running

C) Red – illuminated when the iBoost runs out of water and is in dry run protection mode.

The user interface also has a 'Reset' button (D), this is only functional when the red 'Error' light is illuminated.

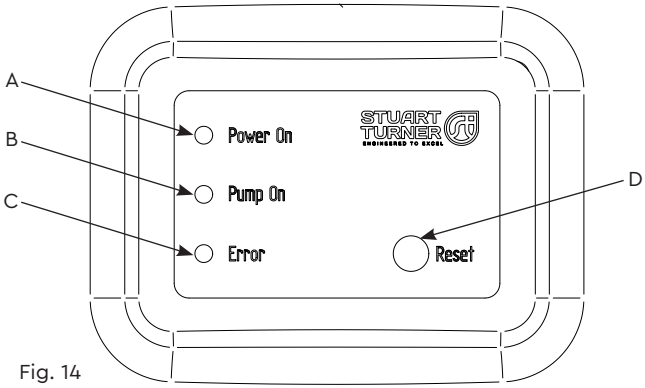

Fig. 14

Cont ...

iBoost V200 CAT 5

6.12 The iBoost V200 control panel is seen mounted directly on the front of the pump motor and has to be set up while the front cover is removed.

a) On switching on the power the display screen will light up showing two figures, left hand being the system pressure and the right being the set pressure, at this stage they will both be "0.0" bar. Please note the unit is factory set to 3 bar.

b) Open a tap and then press "RUN" to start the pump.

c) At any time press "STOP" to stop the pump.

d) Use the "∧" and "∨ " buttons to increase or decrease to the desired operating pressure of the unit (right screen) and the unit will adjust itself to match as can be seen on the left screen.

e) Now open another tap the unit will sense the increase in demand and increase its performance to match demand accordingly.

f) When no flow is detected, the unit will slow the pump to a standby mode.

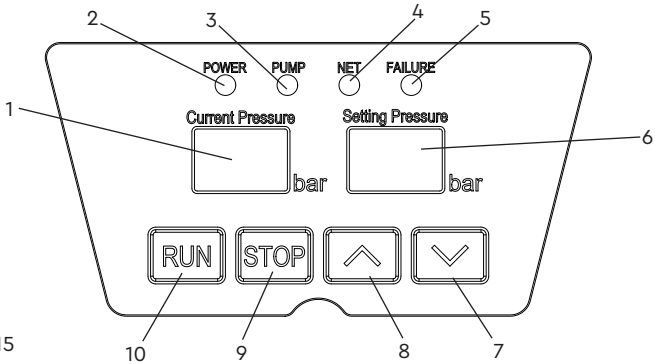

Fig. 15

Note: The maximum pressure this unit can generate is 4.5 bar. **Do not** set the pressure required above 4.0 bar.

No	Name or Function	Comment
1	Current system pressure display	Unit is bar.
2	Power indicator	Will light up when the power is on.
3	Pump indicator	If the motor speed is being controlled up or down the indicator flashes quickly. If the motor is at constant speed showing lack of water, it flashes slowly. When pressure is reached and no demand the indicator stays on.
4	Network connection indicator	Indicator lights up when controller is connected to a network (not applicable for this product).
5	Dry run protection	See section 9.12.
6	Set pressure display	Displays current pressure value in bar. The factory default setting is 3 bar.
7	Decrease	Press ths button to decrease in 0.1 bar steps.
8	Increase	Press ths button to increase in 0.1 bar steps.
9	STOP	Press to stop the pump manually (or to exit Dry run protection).
10	RUN	Press to start the pump manually (or to exit Dry run protection).

6.13 The supply of water from the storage tank can be isolated from the pump by use of the isolation valve behind the pump.

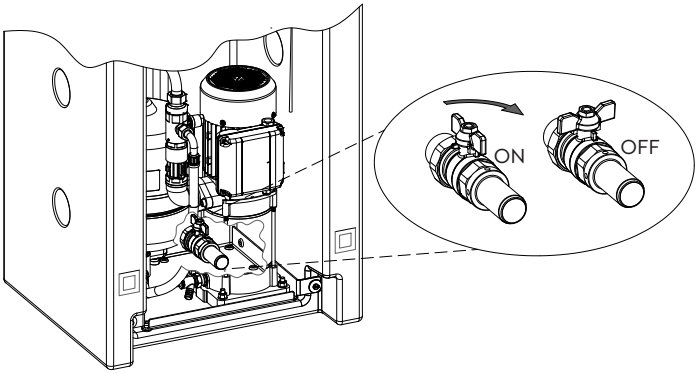

Fig. 16

6.14 **System Flushing**
The pipework system should be flushed out prior to the iBoost being connected to ensure any contaminants/chemical residues and foreign bodies are removed from elsewhere in the system.

6.15 **Water Supply:** Always ensure that water supply is adequate to meet the demand. Ensure the pump chamber is full of water before starting the pump. Failure to do this could result in seal damage. To ensure dry running does not occur the pump must be primed as described in priming section below. **Do not run pump dry**.

Cont ...

6.16 **Priming:**

Never operate pump with inlet and/or outlet isolating valves in the closed position. Damage will occur!

The tank must be filled with water before starting the pump.

(a) Turn on the service valves nearest the iBoost and allow the air to vent from the system.
(b) Turn on the iBoost and allow the pump to build up pressure purging the air from the system..
(c) Open all the service valves (including flushing WCs) in turn to fully purge the air from the system.

6.17 **Starting:**

a) Ensure all outlets are closed, turn power supply 'on' – pump will start, pressurise the system then stop.
b) Open and close all outlets in turn associated with the pump, (including w/c systems) allowing water to flow from each outlet until all air is purged. As each outlet is opened and closed, the pump will start and stop respectively.
   Note: After closing the outlet there will be a small time delay before the pump stops, which is normal.
c) Any tap or control valve within the system when opened and closed will now turn the iBoost on/off, there will be a delayed start due to the water stored in the pressure vessel. Providing this is the case the system is now operating correctly.
d) Carefully check pump and pipework for leaks whilst pump running and stationary before leaving the installation unattended.

6.18 **For Further Technical Support:** Phone the Stuart Turner TechAssist team on +44 (0) 800 31 969 80. Our staff are trained to help and advise you over the phone.

Cont ...

7 MAINTENANCE

7.11 **Pressure vessel:** The pressure vessel should be checked once every 12 months to have its air charge checked or replenished, this should be carried out as follows:-

a) Isolate pump electrically.
b) Remove the front cover.
c) Isolate the water supply by closing the appropriate isolating valves.
d) Release system water pressure by opening an outlet on the system.
e) Check air charge at Schrader valve (Fig. 17) using a tyre pressure gauge.
f) Replenish air charge by injecting air into the vessel via the Schrader valve using a car or bicycle pump (Fig. 17).
g) Close all system outlets, open inlet and outlet isolating valves.
h) After maintenance is completed refer to Section 6 – Commissioning for instructions on re-starting pump.

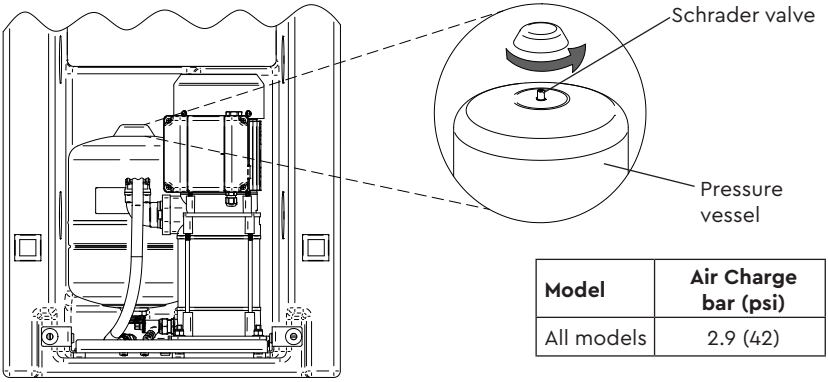

Model	Air Charge bar (psi)
All models	2.9 (42)

Fig. 17

7.12 **Water scale:** In areas of hard water, scale can cause the mechanical pump seal to stick if left without use for long periods. The pump must be run for at least 5 minutes every four weeks to "exercise" all working parts. See Section 8 – Technical Specification for note on water temperature.

7.13 **Water quality:** The iBoost has been manufactured to the highest standard from WRAS approved materials.
As with any stored volume of water; in order to ensure that the water remains fit for use the water temperature needs to remain below 20 °C. The quality of stored water will deteriorate with time and temperature. Bacterial growth is dependent on the water temperature, growth rates will be higher when the conditions are warm.
If the water remains unused for long periods of time, the tank should be drained and flushed through. The tank should be cleaned on an annual basis to protect against bacterial growth. The system must be maintained in line with current Health & Safety regulations.

Cont ...

7.14 The tank can be drained by either:

a) Isolating the mains water supply to the fill valve and using the pump to pump the water out of the tank.

or

b) Isolating the water supply to the tank and attaching a flexible hose to the drain valve (see Fig. 18).

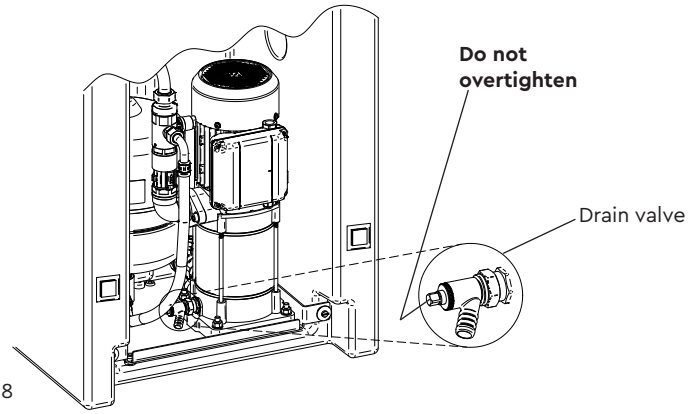

Fig. 18

7.15 **Front cover and keypad cleaning:** The front cover is made from acrylic capped ABS, it must only be cleaned with warm soapy water or mild detergent. **Do not** use abrasive cleaners. The front cover is supplied with clear protective film in place, this can be removed by lifting at the edge.

7.16 **Float fill valve:** The float level is factory set but if in time the water level in the tank is found to be too high, the level can be adjusted by carefully bending the arm of the fill valve down slightly (see Fig. 19). Access the float fill valve by removing the lid of the tank (see Section 3 – Key Features).

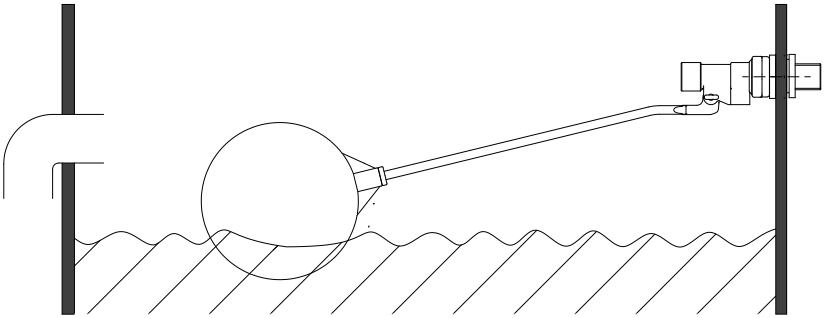

Fig. 19

Cont ...

8 TECHNICAL SPECIFICATION

Pump Model		iBoost F200 CAT 5 46677	iBoost V200 CAT 5 46713
General	Guarantee	3 years	
	WRAS approval	Approved material	Approved material
	Approvals	CE	
Features	Pump control system	Fixed speed, pressure switch	Variable speed, pressure transducer
	Control interface	Standard controls	Programmable controls**
	Dry run protection	✓	✓
	Noise	62 dB(A)	57 dB(A)
	Fluid risk compatibility	CAT 5	
	Air gap	Type AB	
	Pressure vessel	8 litres	
Performance	Maximum head (nominal closed valve)	4.5 bar (450 kPa) (45 metres)	
	Maximum flow	100 l/min	
	Maximum inlet pressure (tank fill valve)	7 bar (700 kPa)	
	Maximum static outlet head	15 metres	
	Ambient air temperature (Min – Max)	4 °C – 30 °C	
Water tank	Nominal size	220 litres	
	Usable capacity	200 litres	
	Float valve type	Equilibrium	
	Fill rate	20 l/min*	
Connections	Cold water inlet	G ½ male	
	Cold water outlet (pump)	G ¾ male	
	Cold water outlet (flexible hose)	G ¾ female x 22 mm push-in (220 mm long)	
	Overflow (compression fitting)	G ¾ (21.5 mm OD)	
Materials	Break tank	Polyethylene	
	Front panel	Acrylic capped ABS	
	Pump body	Brass / stainless steel	
	Pump impeller	Stainless steel	
Pump	Pump type	Multistage centrifugal	
	Duty rating	Continuous (S1)	
	Pump motor type	1 phase induction (thermal trip, auto reset)	3 phase induction (current overload sensor)
Electrical	Power supply / phase / frequency	230 V a.c. / 1 / 50 Hz	
	Current (full load)	5.5 Amps	6.8 Amps
	Power consumption	1260 Watts	996 Watts
	Fuse rating	10 Amps	
	Power cable (pre-wired)	3.0 metres	
Physical	Depth	529 mm	
	Width	536 mm	
	Height	1504 mm	
	Empty weight	55 Kg	56 Kg
	Filled weight	255 Kg	256 Kg

Stuart Turner reserve the right to amend the specification without notice.

*Assumes 1 bar inlet pressure.

**Variable speed pre-set to 3.0 bar, adjustable in 0.1 bar increments.

8.11 **Noise:** F200 CAT 5 – The equivalent continuous A-weighted sound pressure level at a distance of 1 metre from the front of the unit is less than 65 dB(A).
V200 CAT 5 – The equivalent continuous A-weighted sound pressure level at a distance of 1 metre from the front of the unit is less than 58 dB(A).

Cont ...

9 TROUBLE SHOOTING GUIDE

Symptoms	Probable Cause	Recommended Action
Pump will not start.	Electrical supply.	Check power supply. Check fuse (see fuse section). Check circuit breaker is set. Check wiring connections. Ensure the 'Power on' light is illuminated on the user interface. (see Section 6.11)
	Pump Jammed.	If motor 'Buzzes' and power on light is illuminated, switch off power and contact Stuart Turner.
	Damaged pressure switch.	Turn off power. Release system water pressure. Turn on power, pump should start. If NOT contact Stuart Turner.
	Recommended static outlet heads exceeded.	Re-position pump (see Section 2.19).
Reduced/intermittent flow.	Incorrect pipe sizes.	Check for correct pipe sizing, see Section 4.
	Limited water supply	Turn off outlets and allow tank to refill and reduce demand on system
Pump runs on with outlets closed.	Leak in system.	Check tap washers, w/c valve washers, pipe joints. Close system outlet isolation valve – does pump continue to run? Contact Stuart Turner
	Damaged reed switch, P.C.B or pressure switch **F200 CAT 5 only**.	If pump continues to run, this indicates a closed circuit in either the flow switch reed, pressure switch or P.C.B. in the terminal box. Contact Stuart Turner.
or Pump cycles (hunts) on/off frequently.	Low pressure in pressure vessel.	Check pressure in pressure vessel (see Section 7.11).
	Debris under non-return valve sealing face.	Run at full flow to try and flush away debris or remove, clean or replace non-return valve.
Flexible hose leaks	Not fitted correctly.	Check that the hose is pushed firmly onto the pump inlet/outlet connections and pipework.
	Damaged 'O'-rings.	Check copper pipe ends are cleanly cut and deburred.

9.11 V200 Protection code and Instructions

Symptoms	Probable Cause	Recommended Action
	Over-Voltage protection	If the supply voltage to the unit is above 270 V, the unit will stop and show this code. Once the supply voltage drops below 250 V the unit will revert back to normal operation.
	Under-Voltage protection	If the supply voltage to the unit is below 100 V, the unit will stop and show this code. Once the supply voltage returns back to above 110 V the unit will revert back to normal operation.
	Thermal protection	If the temperature of the unit is above 80 °C, the unit will stop and show this code. Once the temperature drops back below 60 °C the unit will revert back to normal operation.
	Sensor error	When the pressure sensor is damaged or disconnected, the unit will show this code, it will recover to a normal operation after the problem is resolved.
	Over pressure protection	When the outlet pipe pressure equals 99% of the pressure sensor range, the unit will display this code, if the outlet pipe pressure drops back below 96% of the pressure sensor range the unit will revert back to normal operation.
	Over phase protection	When there is an open phase from the three phase power supply, the unit will display this code. It will revert back to normal operation once the issue is resolved.
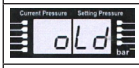	Overload protection	When the current or power range of the unit is exceeded this code will be shown. The unit will revert back to normal operation once the issue is resolved.
	Over-current or short circuit protection	When there is a short circuit or over current fault with the unit is will display this code. The unit will revert back to normal operation once the issue is resolved.

Cont ...

9.12 **Dry Run Protection:**
This pump is fitted with a safety control circuit, which will detect the following fault condition:

- **Dry running caused by water starvation to the pump.**

Should the pump run out of water it will stop as part of a "protective logic sequence", detailed below.
The fault should be rectified before re-starting the pump. Check that there is sufficient water supply to the tank and also ensure that all terminal fitting outlets are closed.

9.13 **Protective Logic Sequence (F200 CAT 5)**
If water starvation occurs and the power supply to the pump remains uninterrupted, the pump controller will perform the following protective sequence.

1. If the pump detects water starvation, it will stop operation, the time taken to stop will be system dependent but typically 3–5 minutes.
2. The red 'Error' light will illuminate on the front panel.
3. Allow time for the tank to refill or resolve the water supply problem.
4. Press and hold the 'Reset' button for 2 seconds.
5. The pump will re-start and function provided the water supply is maintained. During the re-start the nearest/lowest outlet in the system that the iBoost is connected to may have to be opened to allow the air to vent from the pump.
6. If the iBoost fails to operate after water starvation, then please consult the TechAssist team on +44 (0) 800 31 969 80.

9.14 **Protective Logic Sequence (V200 CAT 5):**
If water starvation occurs and the power supply to the pump remains uninterrupted, the pump controller will perform the following protective sequence.

1. If the dry run protectin light is on the pump will try to re-start with the following progressive time delays
   first retry – 8 seconds
   second – 1 minute
   third – 10 minutes
   fouth – 30 minutes
   fifth – 1 hour
   sixth – 2 hours
   every 2 hours there after.
2. The process can be interrupted at any time by pressing the "STOP" button then pressing the "RUN" button to re-start.

9.15 **Environment Protection:** Your appliance contains valuable materials which can be recovered or recycled.
At the end of the products' useful life, please leave it at an appropriate local civic waste collection point.

Cont ...

10 THE AQUABOOST iBOOST F200 CAT 5 / V200 CAT 5 GUARANTEE

Congratulations on purchasing a Stuart Turner product.

We are confident this product will provide many years of trouble free service as all our products are manufactured to the very highest standard.

The Aquaboost iBoost 200-CAT 5 is guaranteed to be free from defects in materials or workmanship for 3 years from the date of purchase.

Within the guarantee period we will repair, free of charge, any defects in the product resulting from faults in material or workmanship, repairing or exchanging the whole unit as we may reasonably decide.

Not covered by this guarantee: Damage arising from incorrect installation, improper use, unauthorised repair, normal wear and tear and defects which have a negligible effect on the value or operation of the product.

Reasonable evidence must be supplied that the product has been purchased within the guarantee term prior to the date of claim (such as proof of purchase or the product serial number).

This guarantee is in addition to your statutory rights as a consumer. If you are in any doubt as to these rights, please contact your local Trading Standards Department.

In the event of a claim please telephone **'TechAssist'** with proof of purchase and product serial number.

+44 (0) 800 31 969 80

You should obtain appropriate insurance cover for any loss or damage which is not covered by Stuart Turner Ltd in this provision.

Please record here for your records.

TYPE NO.	SERIAL NO.	DATE PURCHASED

Cont ...

DECLARATION OF CONFORMITY

Machinery Directive – 2006/42/EC
BS EN 12100, BS EN 809
Low Voltage Directive – 2014/35/EU
BS EN 60335-1, BS EN 60335-2-41
EMC Directive – 2014/30/EU
BS EN 55014-1, BS EN 55014-2, BS EN 61000-3-2, BS EN 61000-3-3,
BS EN 61000-4-2, BS EN 61000-4-3, BS EN 61000-4-4, BS EN 61000-4-5, BS EN 61000-4-6,
BS EN 61000-4-11
EMF Directive – 1999/519/EC
BS EN 62233
RoHs Directive – 2011/65/EU
WEEE Directive – 2012/19/EU

IT IS HEREBY CERTIFIED THAT THE STUART ELECTRIC MOTOR DRIVEN PUMP AS SERIAL NUMBER BELOW, COMPLIES WITH THE ESSENTIAL REQUIREMENTS OF THE ABOVE E.E.C. DIRECTIVES.

RESPONSIBLE PERSON
AND MANUFACTURER

STUART TURNER LIMITED
HENLEY-ON-THAMES, OXFORDSHIRE
RG9 2AD ENGLAND.

Signed ..... Technical Director

Stuart Turner are an approved company to BS EN ISO 9001:2015

STUART TURNER
ENGINEERED TO EXCEL

Stuart Turner Ltd, Henley-on-Thames, Oxfordshire RG9 2AD ENGLAND
Tel: +44 (0) 1491 572655, Fax: +44 (0) 1491 573704
info@stuart-turner.co.uk www.stuart-turner.co.uk

Issue No. 2719/3-01 **Pt. No. 20587**